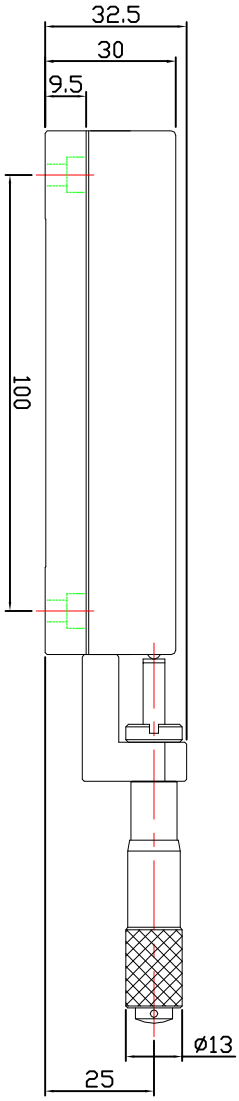
32.5
30
9.5
100
25
ø13

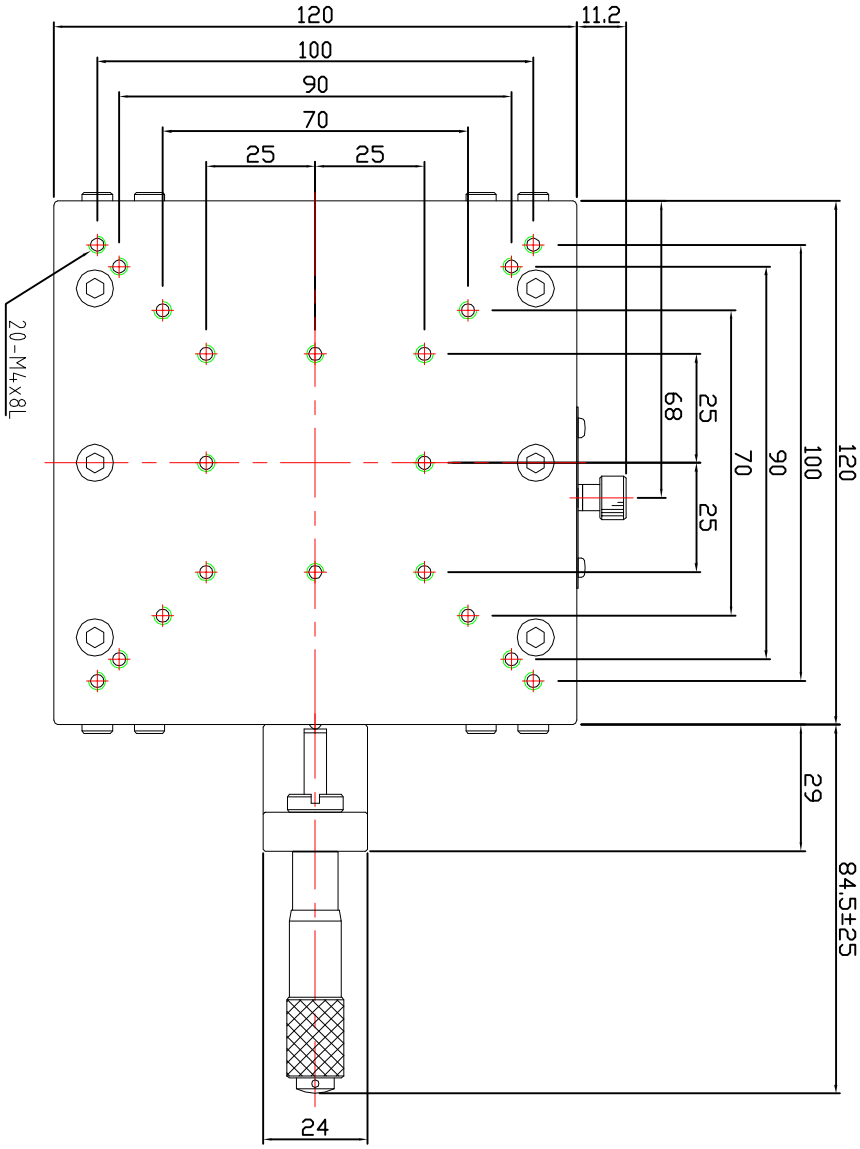
120
11.2
100
90
70
25
25
20-M4x8L
68
25
70
90
100
120
25
29
84.5±25
24

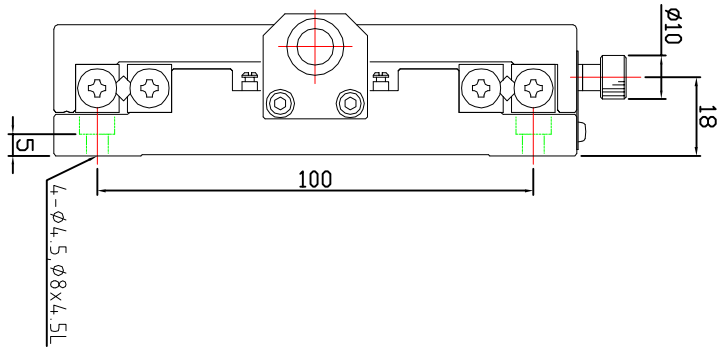
ø10
18
5
100
4-ø4.5 ø8x4.5L