MYL40-AS

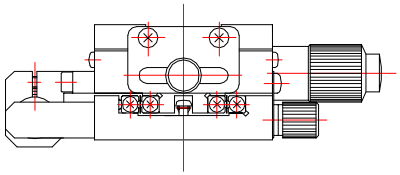

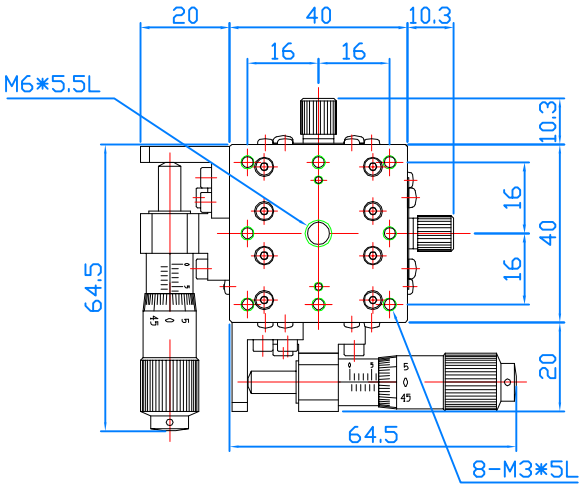
20
40
10.3
16
16
M6*5.5L
10.3
16
40
16
64.5
20
64.5
8-M3*5L

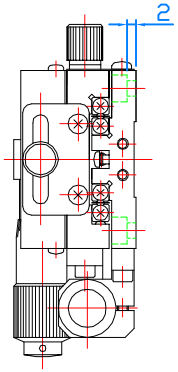
2

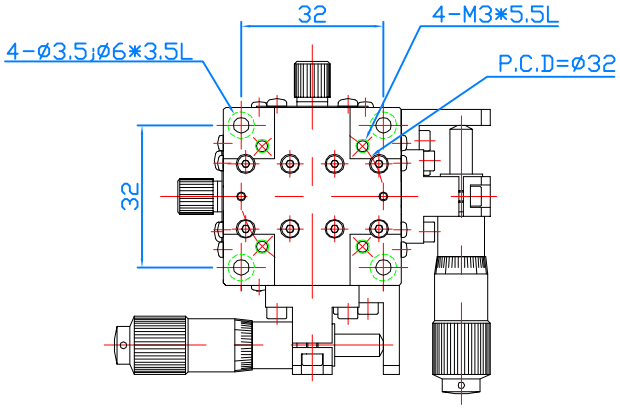
32
4-M3*5.5L
4-ø3.5;ø6*3.5L
P.C.D=ø32
32

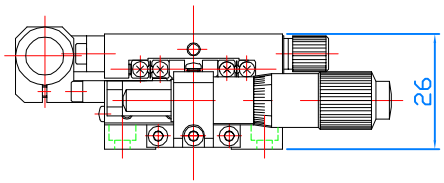
26