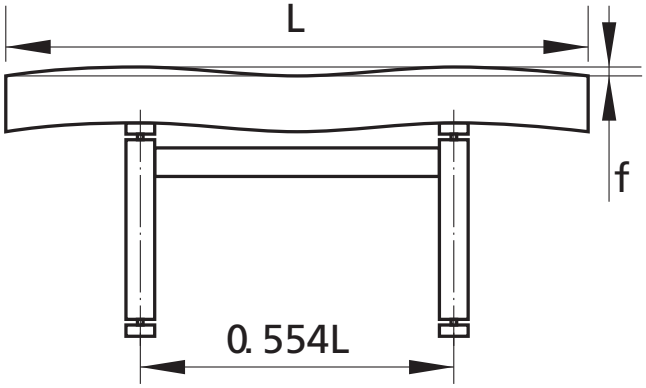
L
f
0. 554L