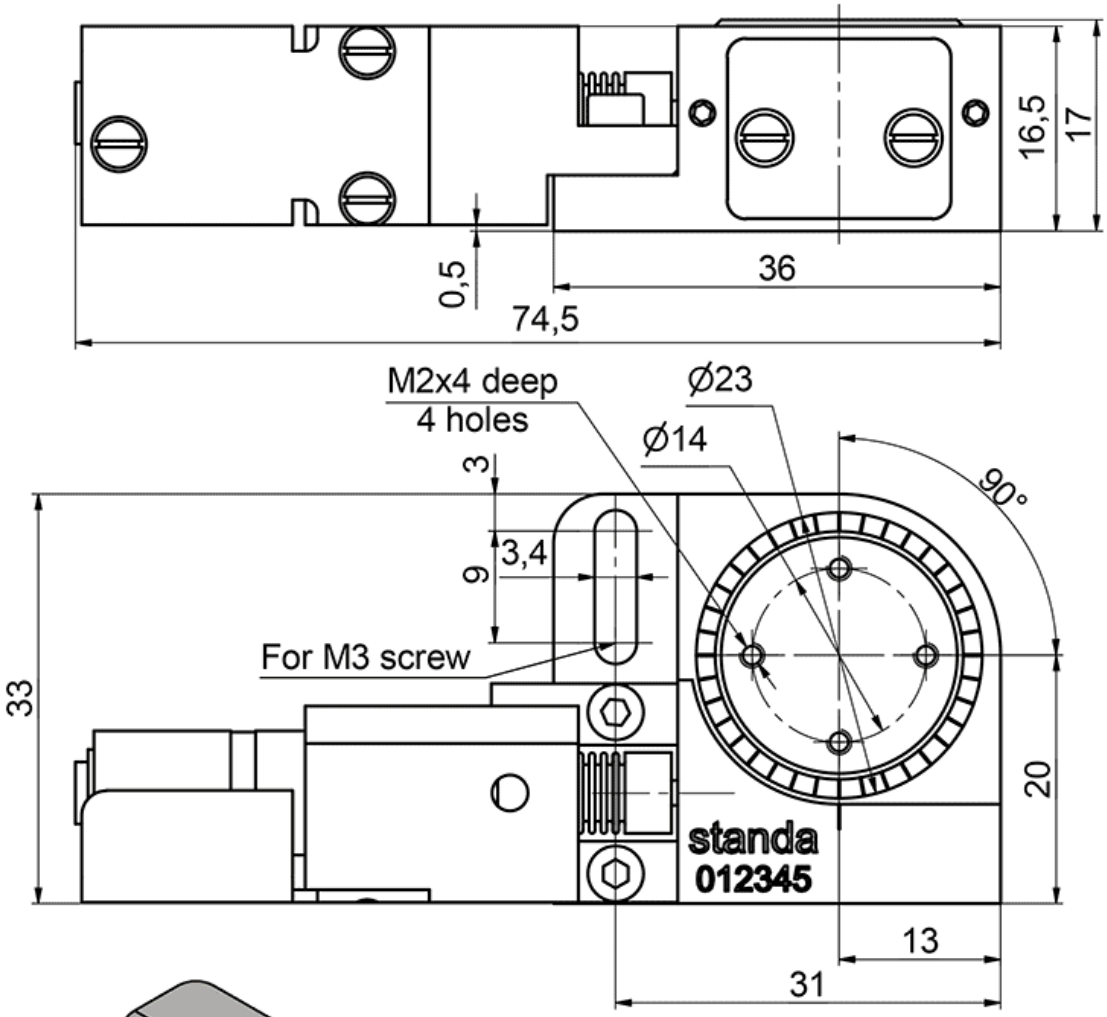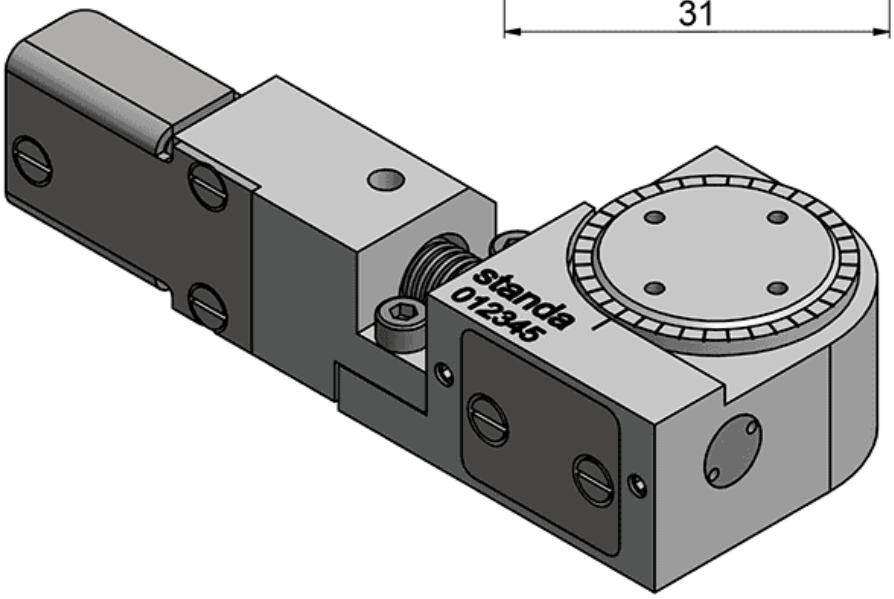*Motorizes Rotation Stage* *8MR20-F10*