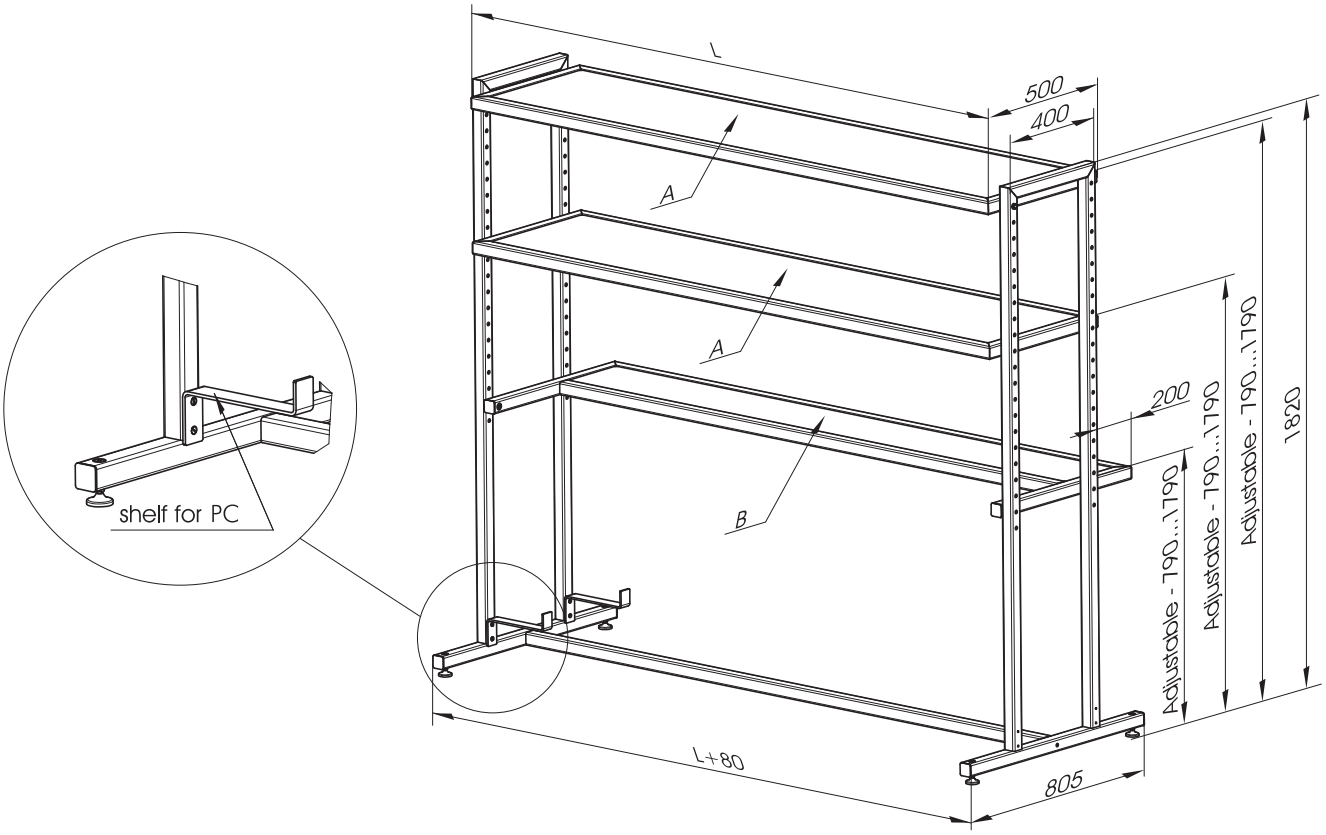
L
500
400
A
A
B
200
shelf for PC
Adjustable - 790...1790
Adjustable - 790...1790
Adjustable - 790...1790
1820
L+80
805