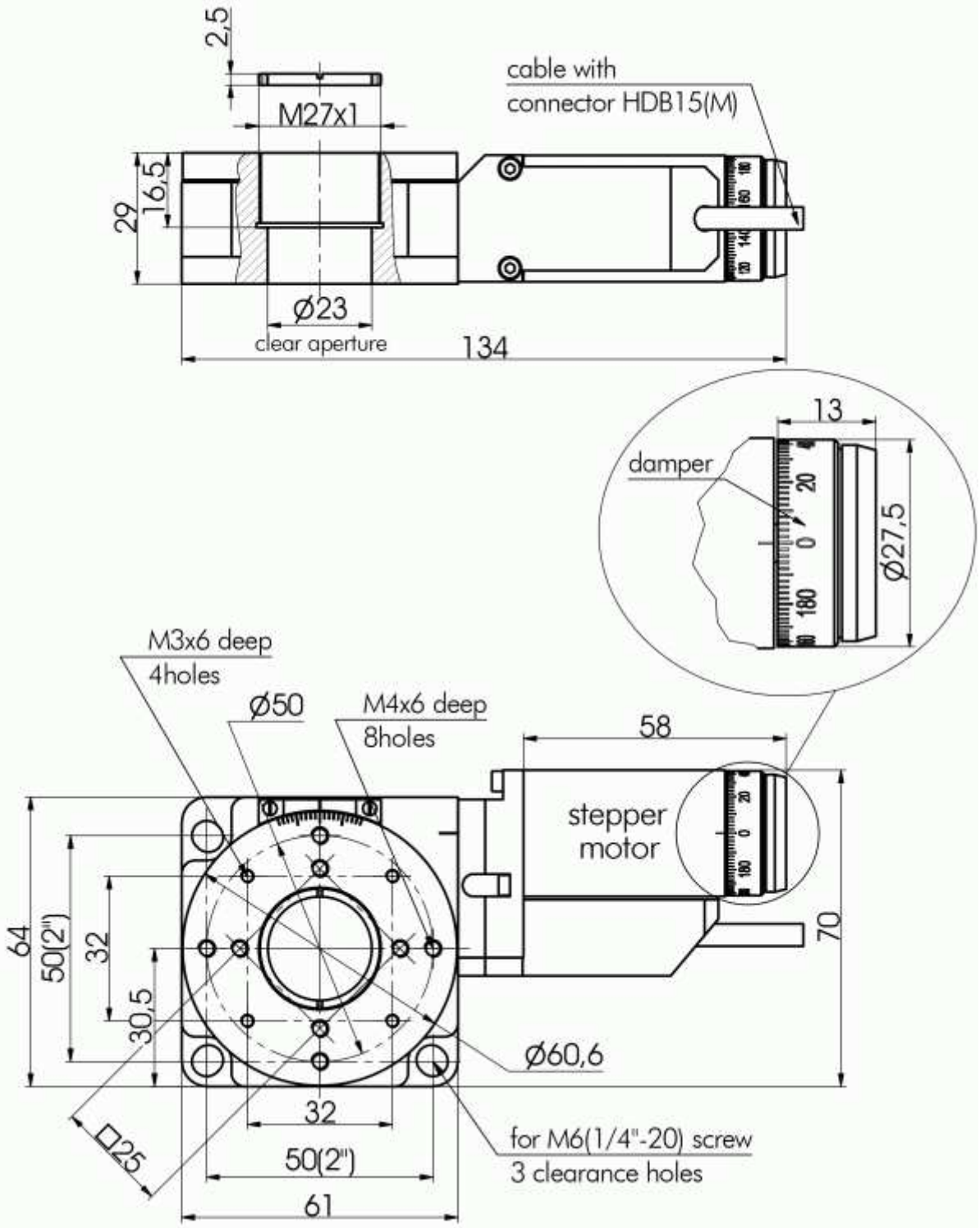Motorized Rotation Stage *8MR151-1*