standa
Manufacturer of Opto-Mechanical equipment for research, industry and education
P.O. Box 377
03012 Vilnius, Lithuania
Phone: +370-5-2651474
Fax: +370-5-2651483
E-mail: sales@standa.lt
http://www.standa.lt

Motorized Rotation Stage
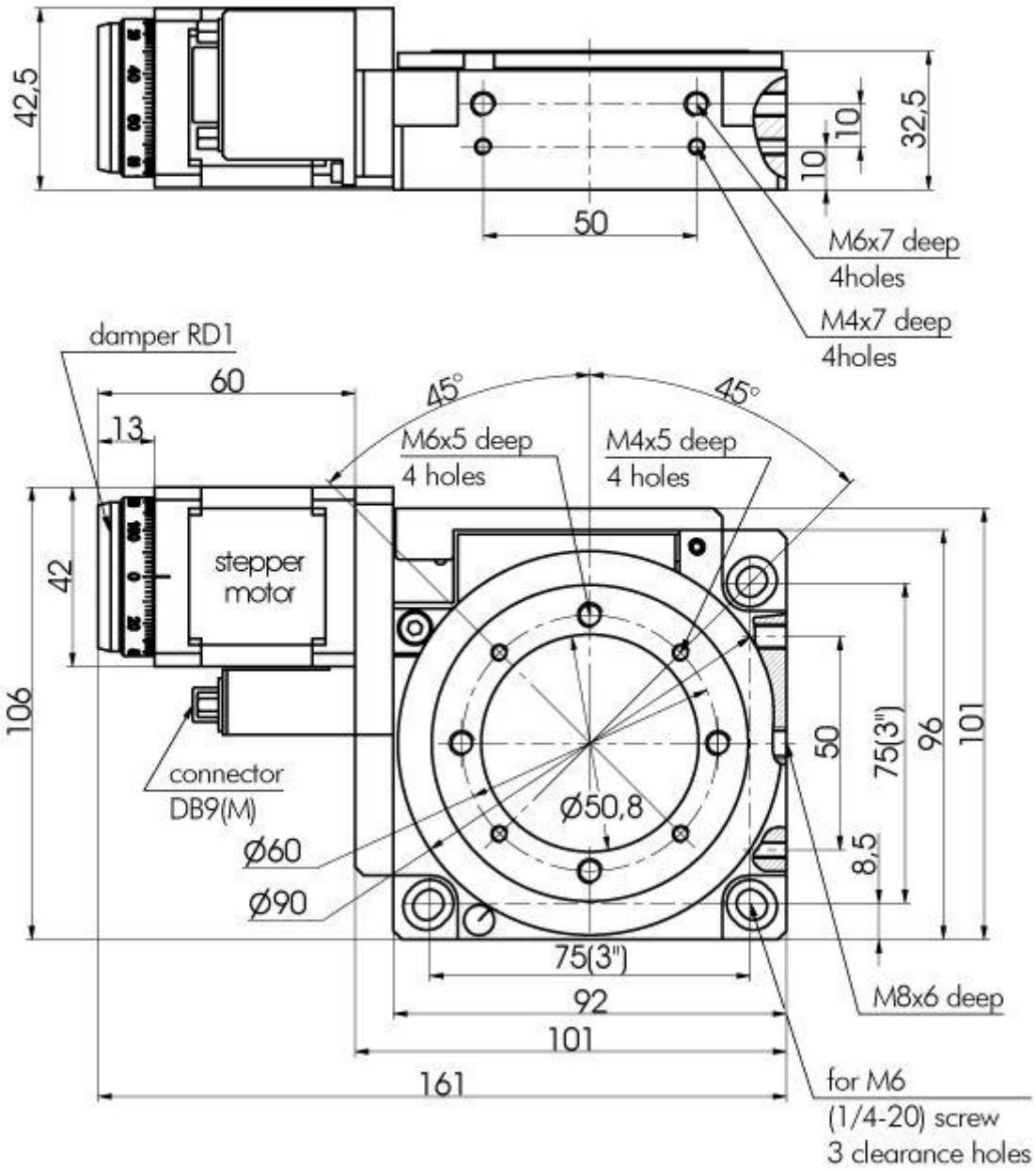
8MR190-2-4247