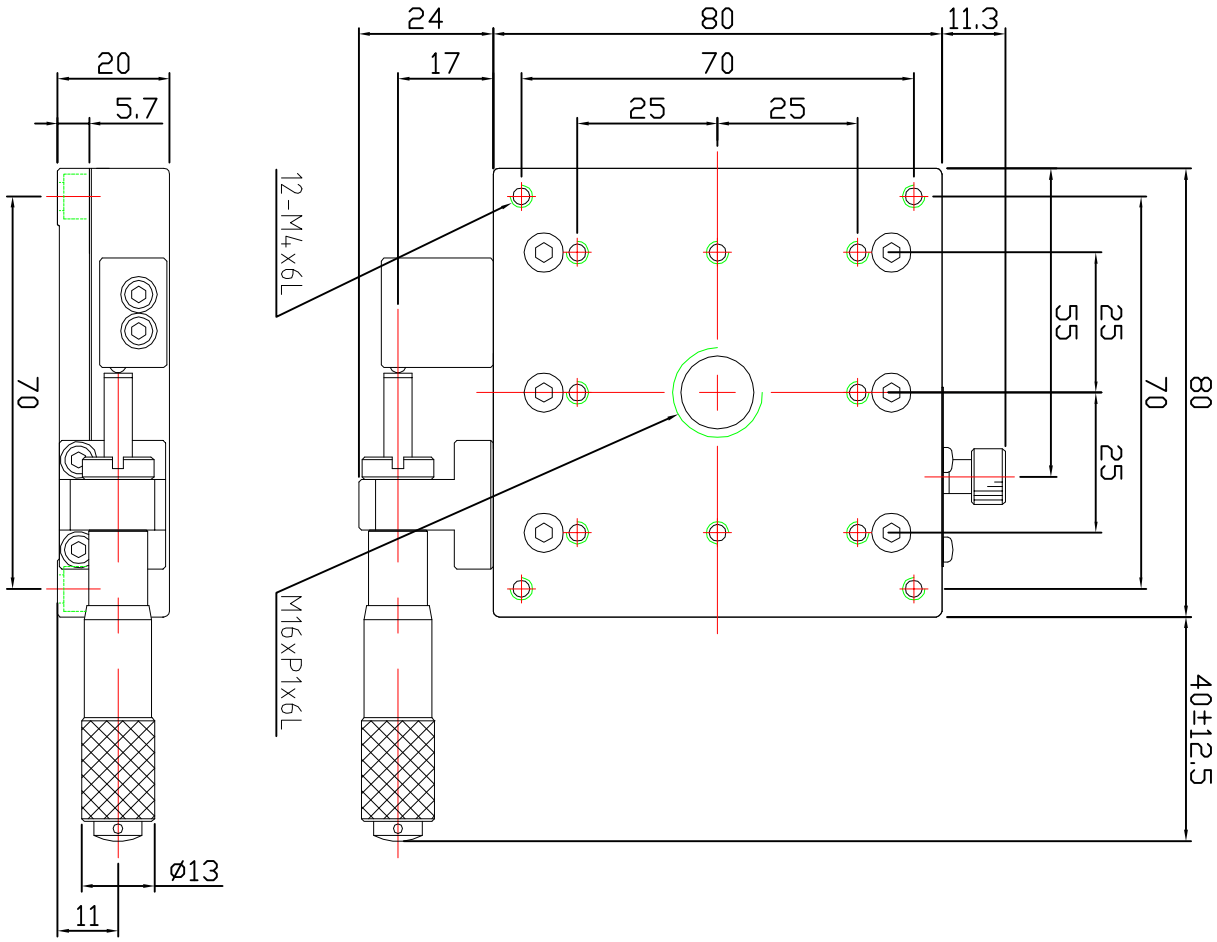
24
80
11.3
17
70
25
25
20
5.7
12-M4x6L
55
25
70
80
25
70
M16xP1x6L
40±12.5
ø13
11

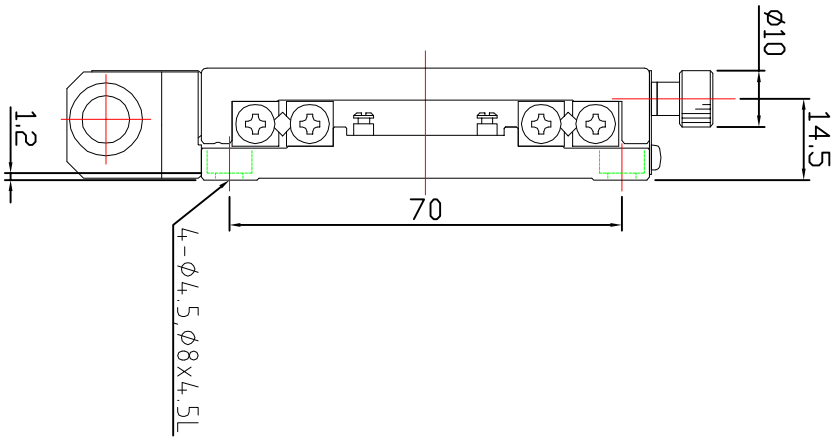
ø10
1.2
14.5
70
4-ø4.5,ø8x4.5L